Intematix High Fidelity Ambient Lighting Module

Product Data Sheet

The Intematix ambient lighting module is a simple plug and play solution that enables highly uniform glare free lighting. The unique 240 degree wide beam pattern allows for the use of fewer light engines to create excellent uniformity and fill in a wide variety of functional, decorative, and architectural lighting applications. The remote phosphor system architecture eliminates the pixelation that is often present with white LED linear lighting systems and remains clean and consistent even under deep dimming conditions.

These modules deliver color rendering of up to 98 CRI with high R1-R15 values, including an R9 of 97 for accurate red color rendering and an R13 of 98 for skin tones. Color consistency of 3 SDCM is maintained over angle, over length, part to part, and over time; completely eliminating any concerns of color uniformity. Length options of 9.5, 12, 20, 21.8 and 43 inches reduce wiring, mounting steps, and components; further reducing system costs. Application areas include retail, hospitality, museum, healthcare, and high end office and residential lighting.

Product Features

- Integrated modular solution
- Wide angle 240° FWHM beam pattern
- High CRI with high color fidelity
- Diffuse and uniform emission pattern
- Impact resistant polycarbonate cover
- 3 SDCM Color consistency
- Multiple product length options
- 5 Year limited warranty

Application Benefits

- Accelerates time to market
- Excellent uniformity and fill
- Accurate color rendering
- Glare free non-pixelated lighting
- Protects LEDs from risk of damage
- Uniform consistent lighting
- Reduced wiring and mounting costs
- Design with confidence

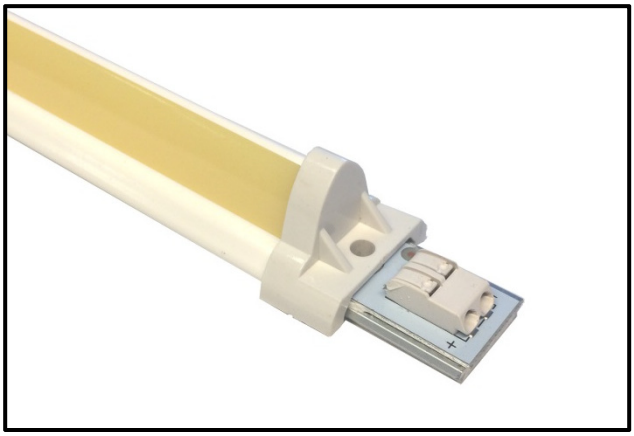

Table of Contents

Product Nomenclature	3
Minor Product Change Policy	3
Performance Characteristics	4
Color Rendering Data	4
Typical Electrical Characteristics	5
Maximum Electrical Characteristics	6
Color Binning Information	7
Relative Spectral Power Distribution	8
Intensity Distribution	9
Relative Light Output vs. Drive Current	9
Forward Voltage vs. Forward Current	12
Electrical Power vs. Forward Current	14
Temperature Ratings	17
Lumen Maintenance	17
Mechanical Characteristics	18
Regulatory Compliance	23
Product Marking	23
Packaging and Labeling	24
Handling Considerations	25
Company Information	25

Product Nomenclature

Intematix Ambient Lighting Module products are identified by the following product nomenclature:

I L M – A B C D – E F G – H I J K – L M N P

Where:

I L M – Designates the Intematix light module product family

A B – Designates the application

A L = Ambient lighting module

C D – Designates the design version

0 1 = Version 1

E – Designates the first digit in CRI

0 = 95 CRI minimum

F G – Designates the first two digits in CCT

4 0 = 4000K

H I J K – Designates the nominal lumen output

1 6 0 0 = 1600 lm nominal

L M N P – Designates nominal product length in mm

0 5 0 8 = 508mm (20 inches)

Example:

ILM – AL01 – 040 – 1600 – 0508: Intematix ambient lighting module, design version 1, 95 CRI minimum, 4000K, 1600 nominal lumens, 508mm length

Minor Product Change Policy

The rigorous qualification testing of Intematix products ensures product performance. Slight cosmetic changes which do not affect the form, fit or function of the product may occur as Intematix continues product optimization.

Performance Characteristics

Product	Length[2]	Drive Current (mA)	Nominal CCT[1] (K)	Color Consistency[3] (SDCM)	Typ CRI[1,4]	Typical LOP[1,5] (lm)	Typical Efficacy[6] (lm/W)
ILM-AL01-030-0600-0240	240mm / 9.5”	350	3000	3	98	610	102
ILM-AL01-040-0600-0240		350	4000	3	96	675	113
ILM-AL01-030-0900-0305	305mm / 12”	350	3000	3	98	830	104
ILM-AL01-040-0900-0305		350	4000	3	96	915	114
ILM-AL01-030-1600-0508	508mm / 20”	500	3000	3	98	1490	104
ILM-AL01-040-1600-0508		500	4000	3	96	1620	113
ILM-AL01-030-1800-0554	554mm / 21.8”	500	3000	3	98	1640	104
ILM-AL01-040-1800-0554		500	4000	3	96	1790	114
ILM-AL01-030-2400-1092	1092mm / 43”	500	3000	3	98	2260	105
ILM-AL01-040-2400-1092		500	4000	3	96	2495	116

Notes:

1. All values included in the table above are hot stabilized performance assuming a case temperature (T_c) of 40°C after 60 minutes of operation.
2. Lengths included in the table above are the maximum mechanical length of the product. For more detailed information please see the mechanical characteristics section of this data sheet.
3. Color Consistency is defined as variation from part to part, color over angle within a part from -90 to +90 degrees from the vertical axis of the part, and over the length of the product. Intematix maintains a tolerance of ± 0.5 SDCM on color consistency measurements.
4. Lumen output is maintained within ± 5% of the typical value. Intematix maintains a tolerance of ± 7% of flux measurements.

Color Rendering Data

CCT	R1	R2	R3	R4	R5	R6	R7	R8	R9	R10	R11	R12	R13	R14	R15
3000K	98	99	97	99	98	97	98	98	97	99	97	83	98	97	98
4000K	98	99	96	96	96	96	97	96	92	95	97	73	99	97	96

Typical Electrical Characteristics

Product	Typical Forward Current (mA)	Forward Voltage at Typical Forward Current (V)			Typical Power at Typical Forward Current (W)
		Min	Typ	Max	
ILM-AL01-030-0600-0240	350	15.6	17.2	18.3	6.0
ILM-AL01-040-0600-0240					
ILM-AL01-030-0900-0305	350	20.8	22.9	24.4	8.0
ILM-AL01-040-0900-0305					
ILM-AL01-030-1600-0508	500	26.0	28.6	30.5	14.3
ILM-AL01-040-1600-0508					
ILM-AL01-030-1800-0554	500	28.6	31.5	33.6	15.7
ILM-AL01-040-1800-0554					
ILM-AL01-030-2400-1092	500	39.0	42.9	45.8	21.5
ILM-AL01-040-2400-1092					

Notes:

1. All values included in the table above are hot stabilized performance assuming a case temperature (T_c) of 40°C after 60 minutes of operation.
2. Intematix maintains a tolerance of ± 0.10V on forward voltage measurements.

Maximum Electrical Characteristics

Product	Maximum Forward Current (mA)	Forward Voltage at Max Forward Current (V)			Typical Power at Maximum Forward Current (W)
		Min	Typ	Max	
ILM-AL01-030-0600-0240	500	16.1	17.7	18.8	8.9
ILM-AL01-040-0600-0240					
ILM-AL01-030-0900-0305	500	21.5	23.6	25.1	11.8
ILM-AL01-040-0900-0305					
ILM-AL01-030-1600-0508	700	26.9	29.5	31.4	20.7
ILM-AL01-040-1600-0508					
ILM-AL01-030-1800-0554	700	29.6	32.5	34.5	22.8
ILM-AL01-040-1800-0554					
ILM-AL01-030-2400-1092	700	40.4	44.3	47.2	31.0
ILM-AL01-040-2400-1092					

Color Binning Diagram

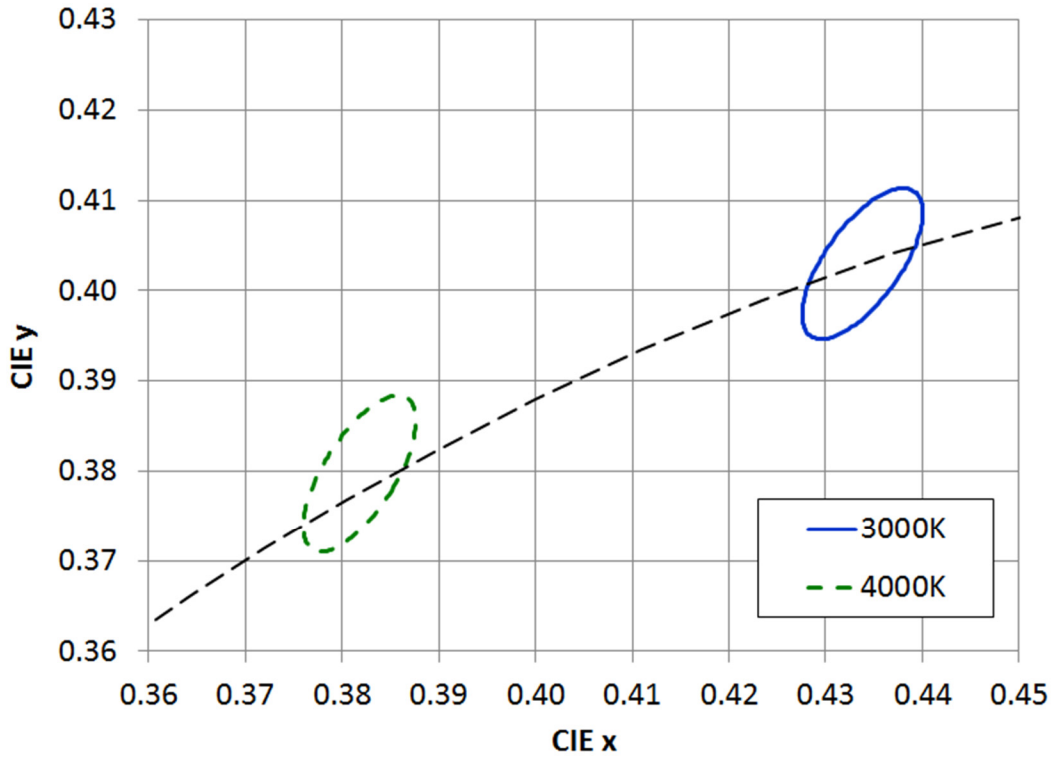

Color Bin Center Points

Nominal CCT	CIE x	CIE y
3000K	0.4338	0.4030
4000K	0.3818	0.3797

Relative Spectral Power Distribution

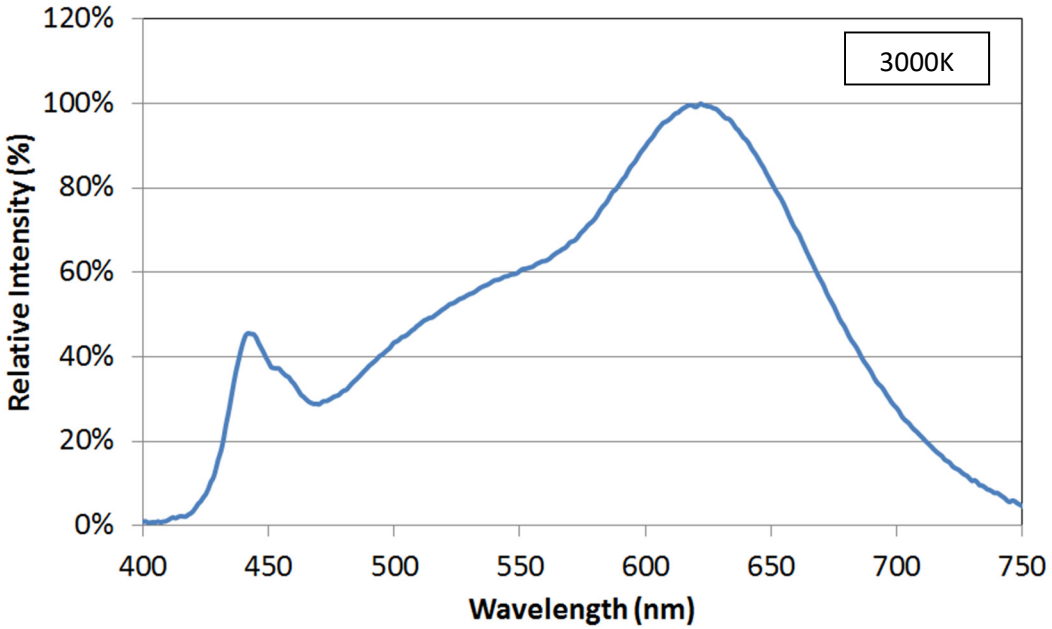

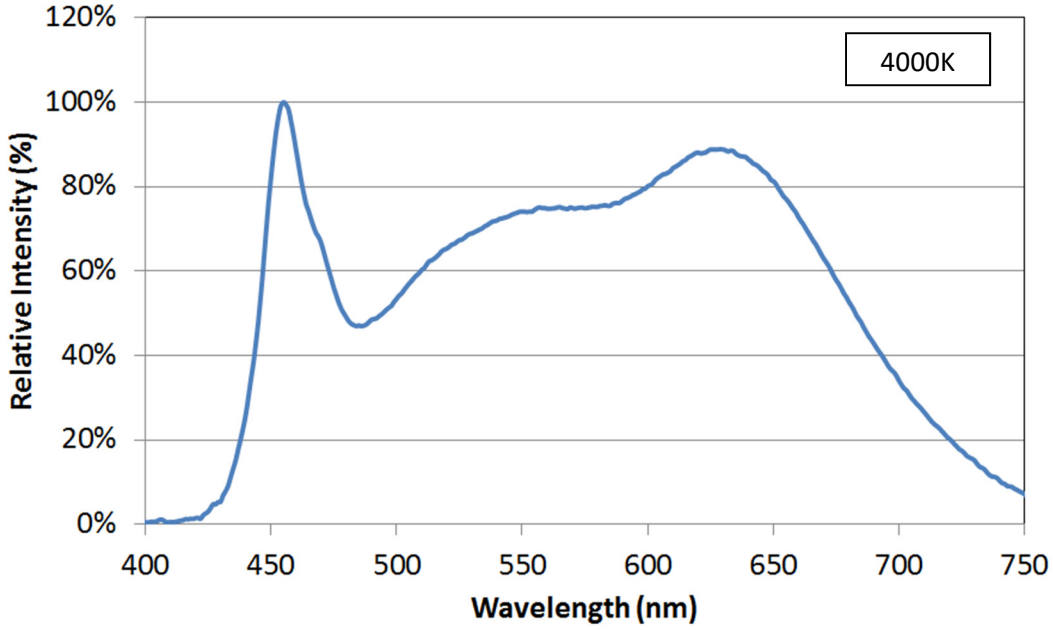

Intensity Distribution

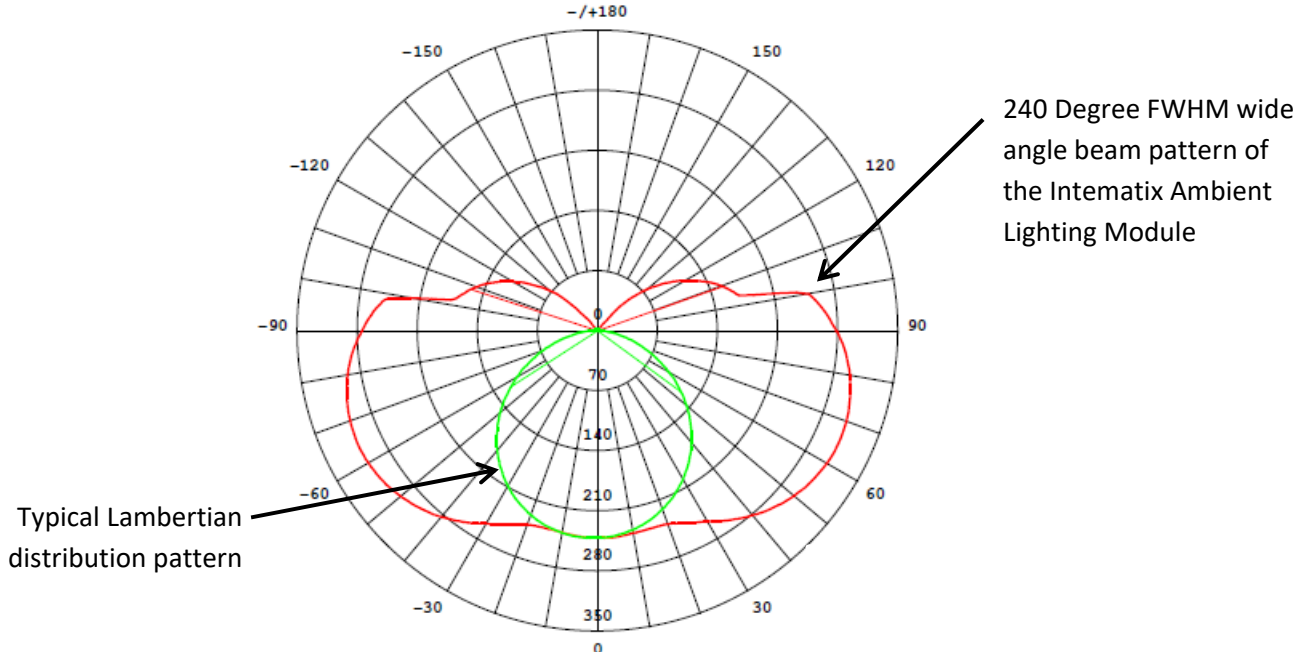

Relative Light Output vs. Drive Current

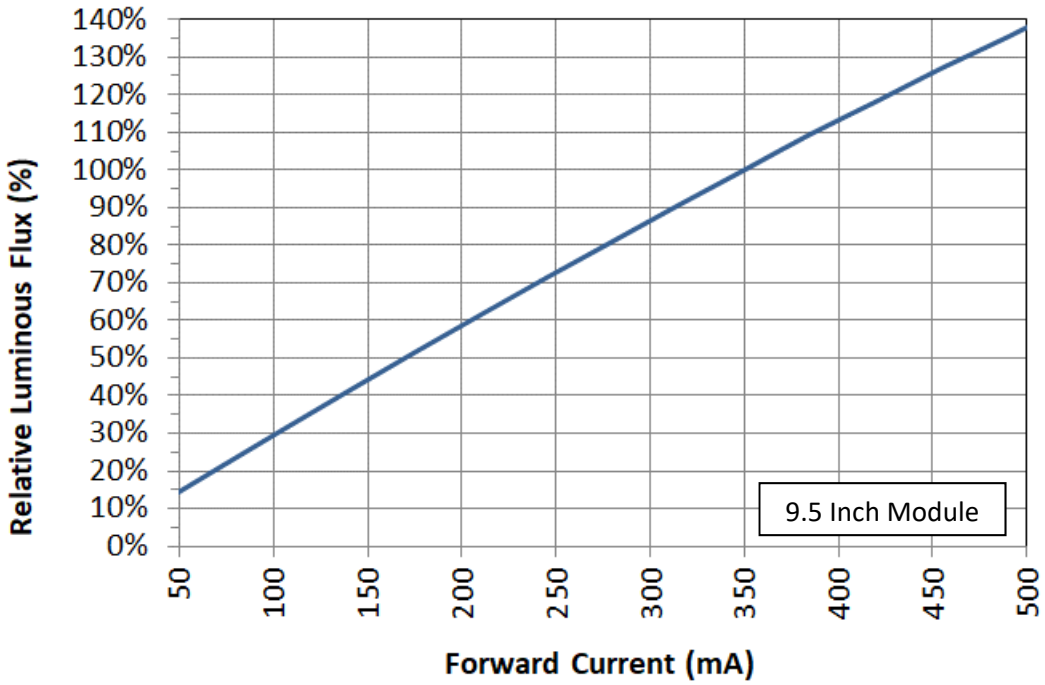

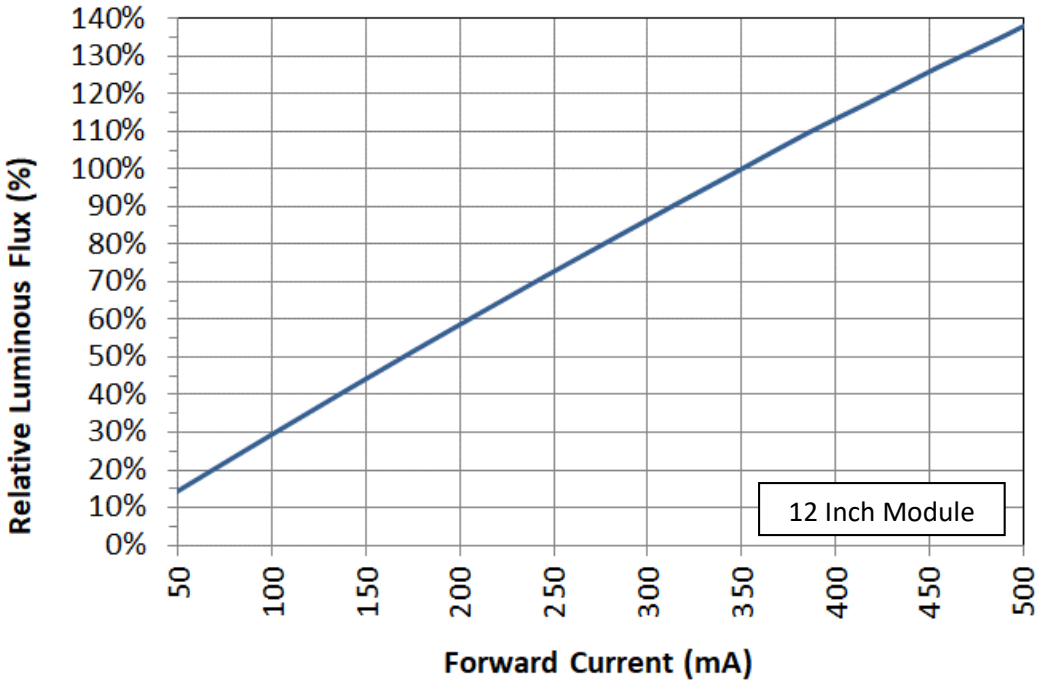
140%
130%
120%
110%
100%
90%
80%
70%
60%
50%
40%
30%
20%
10%
0%
Relative Luminous Flux (%)
12 Inch Module
50
100
150
200
250
300
350
400
450
500
Forward Current (mA)

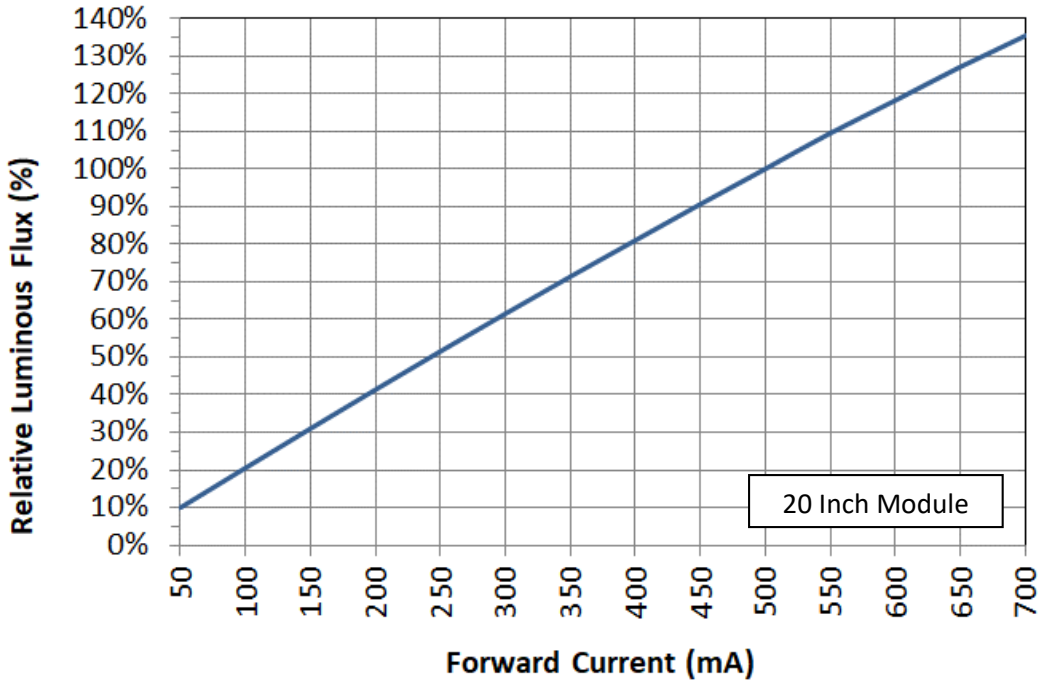
140%
130%
120%
110%
100%
90%
80%
70%
60%
50%
40%
30%
20%
10%
0%
Relative Luminous Flux (%)
20 Inch Module
50
100
150
200
250
300
350
400
450
500
550
600
650
700
Forward Current (mA)

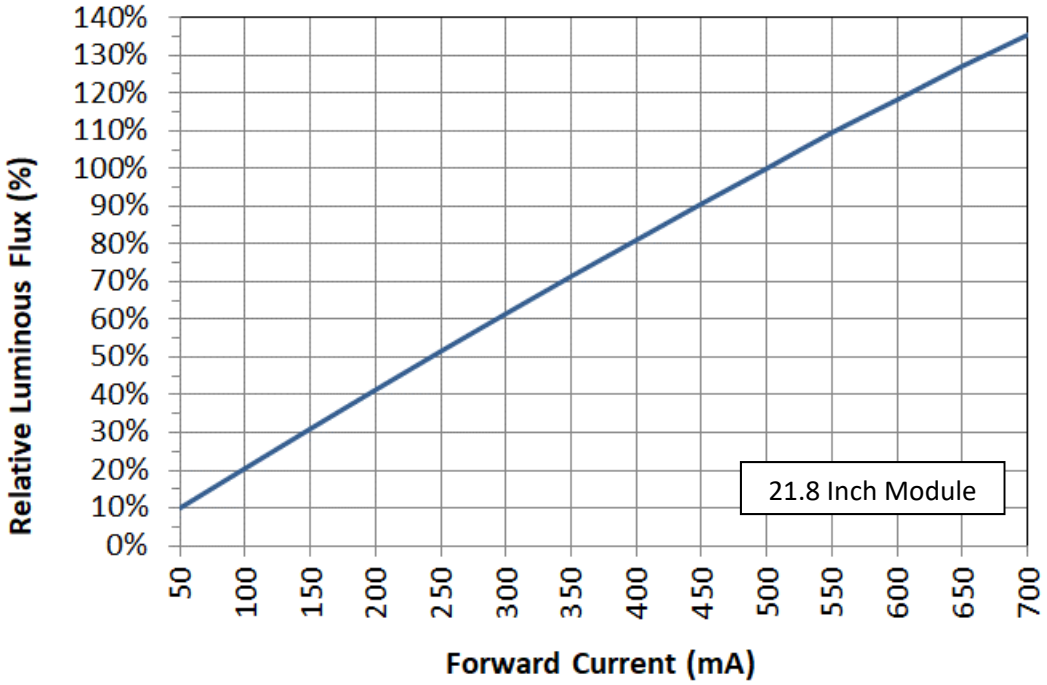
Relative Luminous Flux (%)
140%
130%
120%
110%
100%
90%
80%
70%
60%
50%
40%
30%
20%
10%
0%
50
100
150
200
250
300
350
400
450
500
550
600
650
700
Forward Current (mA)
21.8 Inch Module

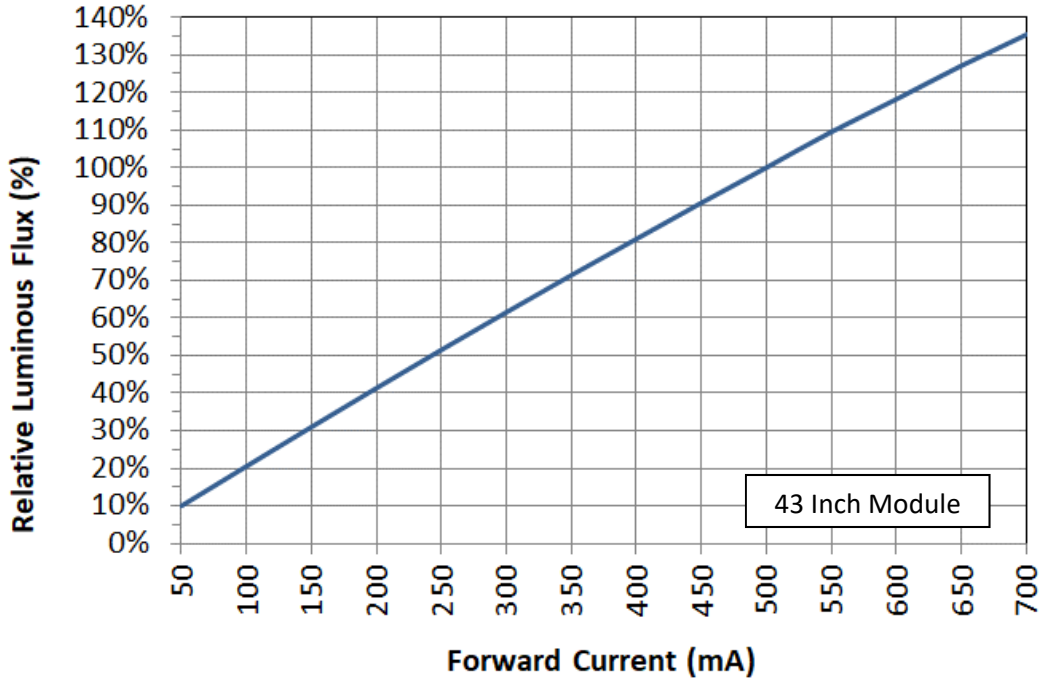
Relative Luminous Flux (%)
140%
130%
120%
110%
100%
90%
80%
70%
60%
50%
40%
30%
20%
10%
0%
50
100
150
200
250
300
350
400
450
500
550
600
650
700
Forward Current (mA)
43 Inch Module

Forward Voltage vs. Forward Current

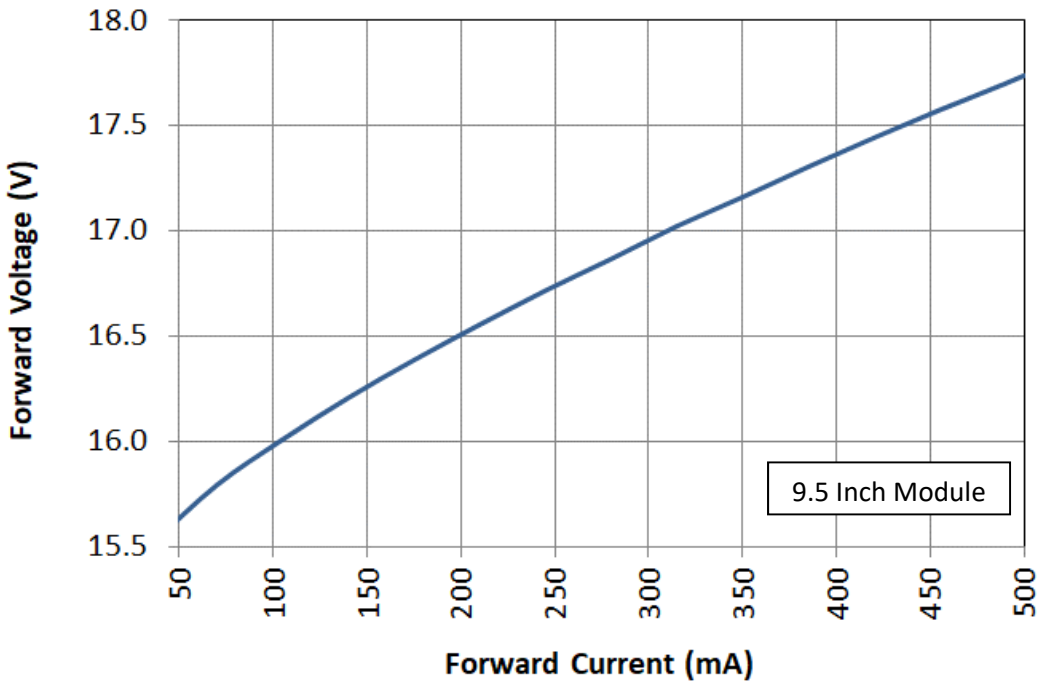

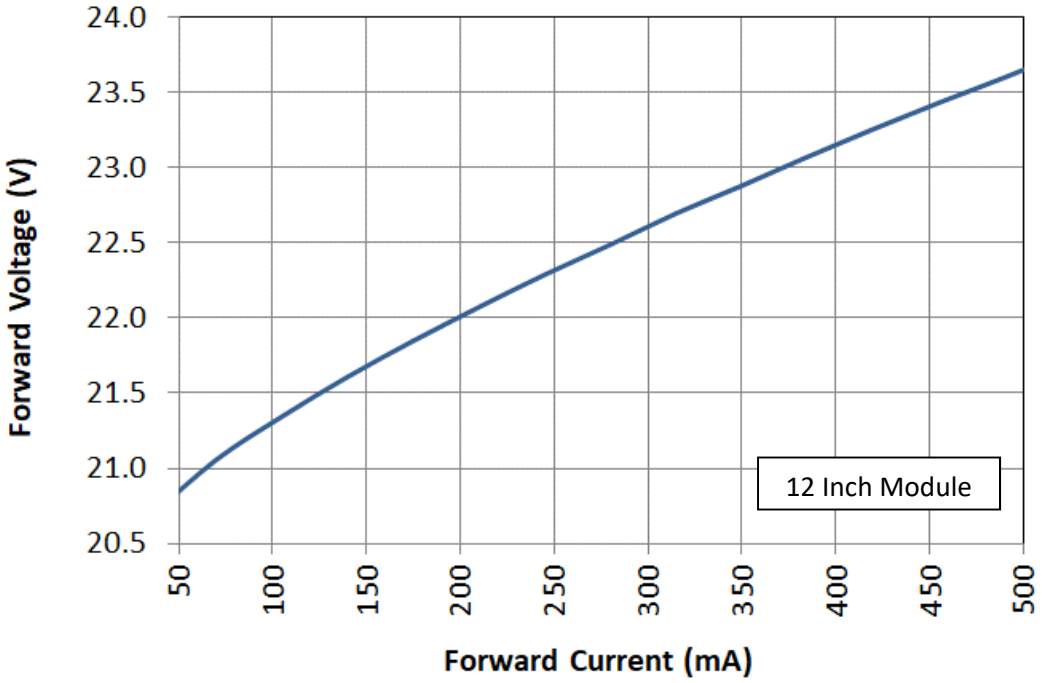

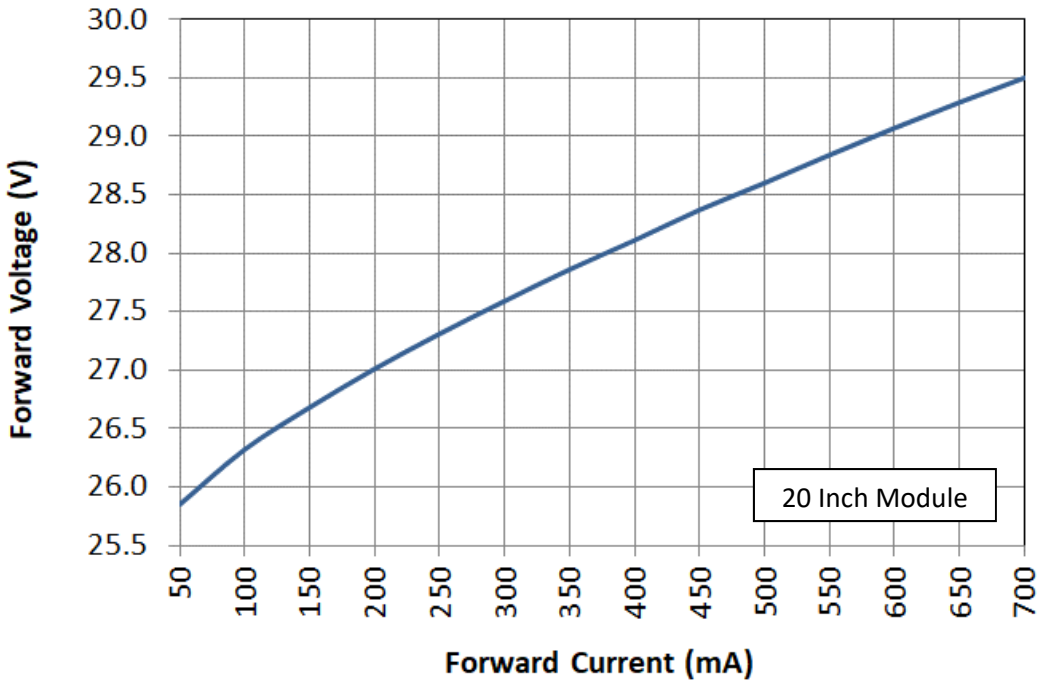
30.0
29.5
29.0
28.5
28.0
27.5
27.0
26.5
26.0
25.5
Forward Voltage (V)
20 Inch Module
50
100
150
200
250
300
350
400
450
500
550
600
650
700
Forward Current (mA)

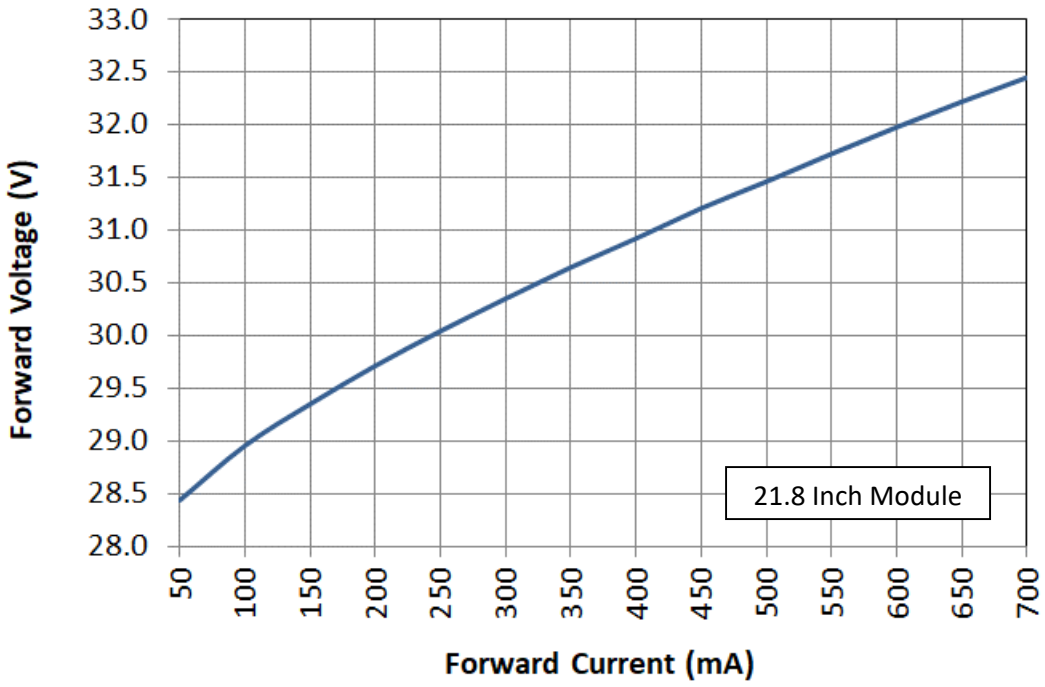
33.0
32.5
32.0
31.5
31.0
30.5
30.0
29.5
29.0
28.5
28.0
Forward Voltage (V)
21.8 Inch Module
50
100
150
200
250
300
350
400
450
500
550
600
650
700
Forward Current (mA)

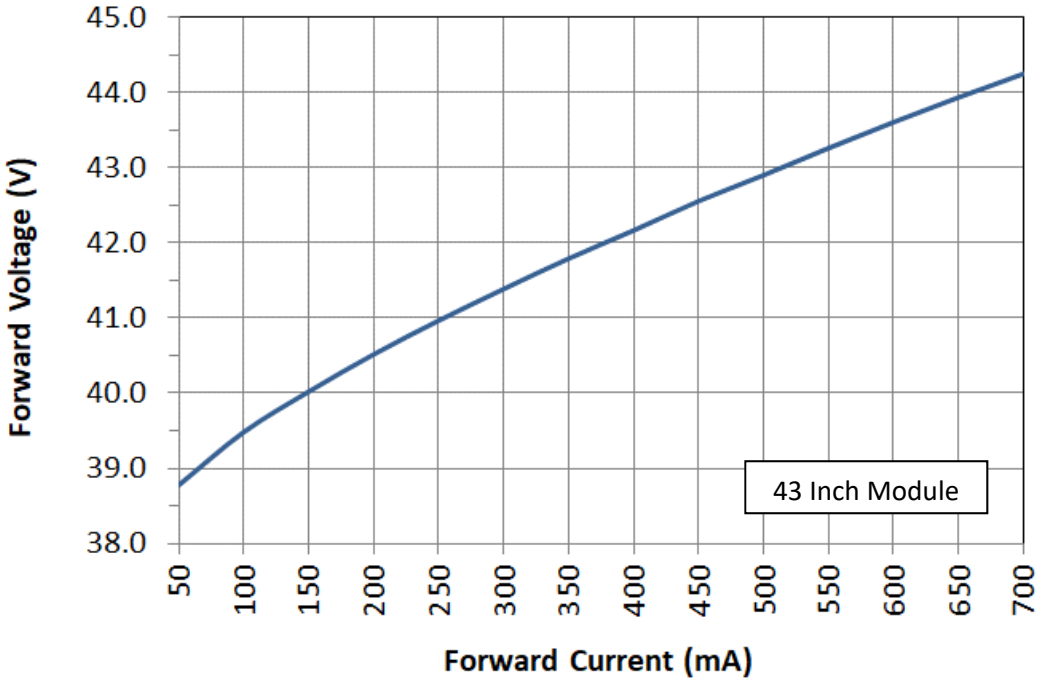

Electrical Power vs. Forward Current

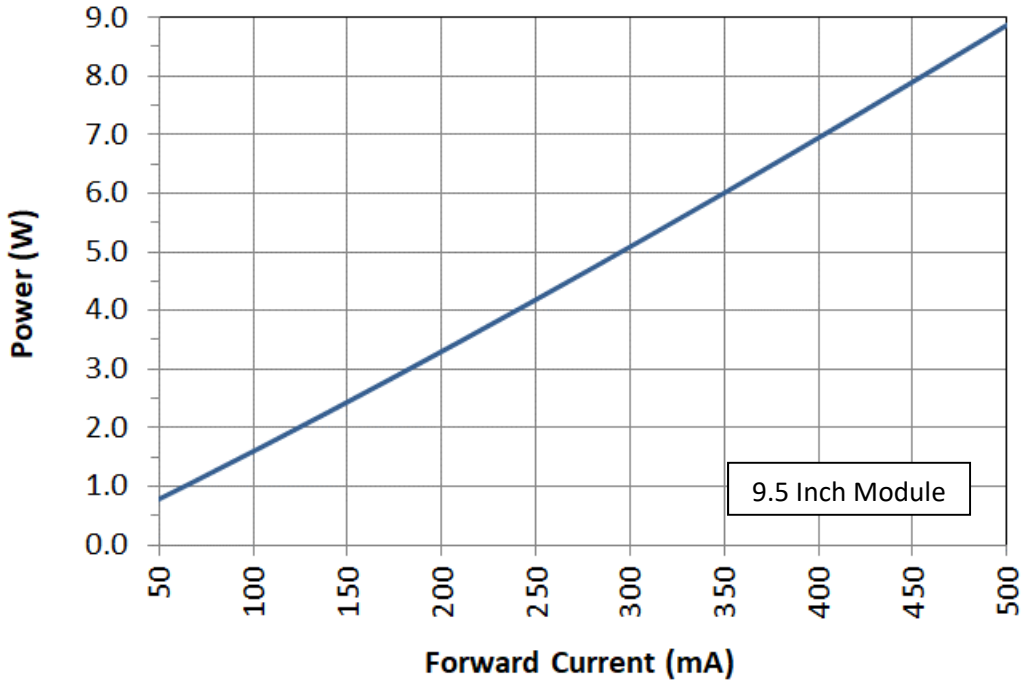

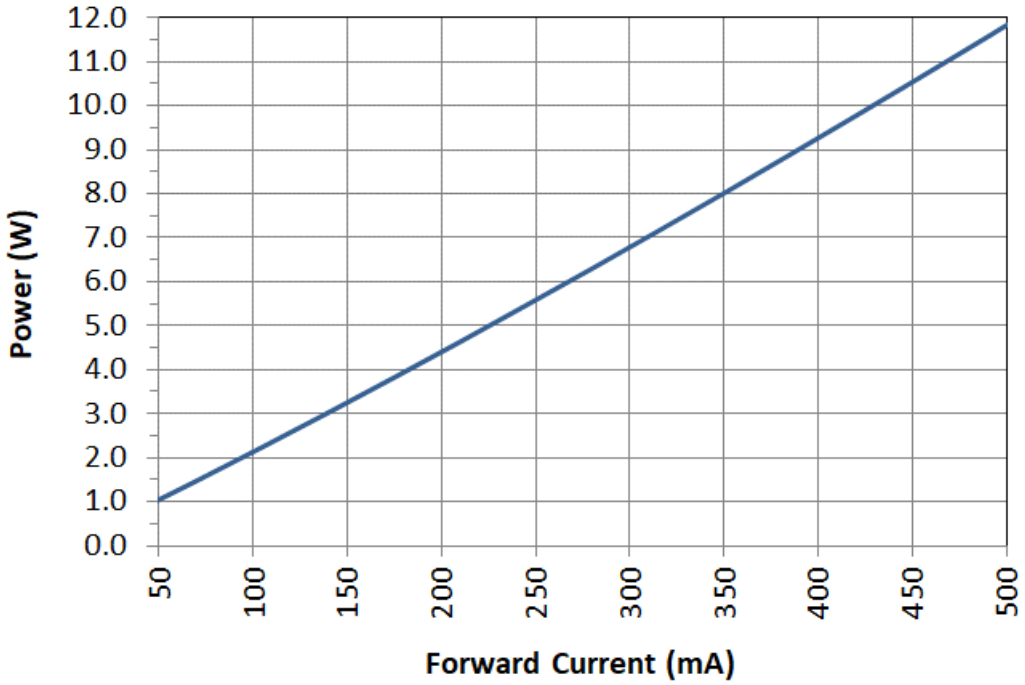
12.0
11.0
10.0
9.0
8.0
7.0
6.0
5.0
4.0
3.0
2.0
1.0
0.0
Power (W)
50
100
150
200
250
300
350
400
450
500
Forward Current (mA)

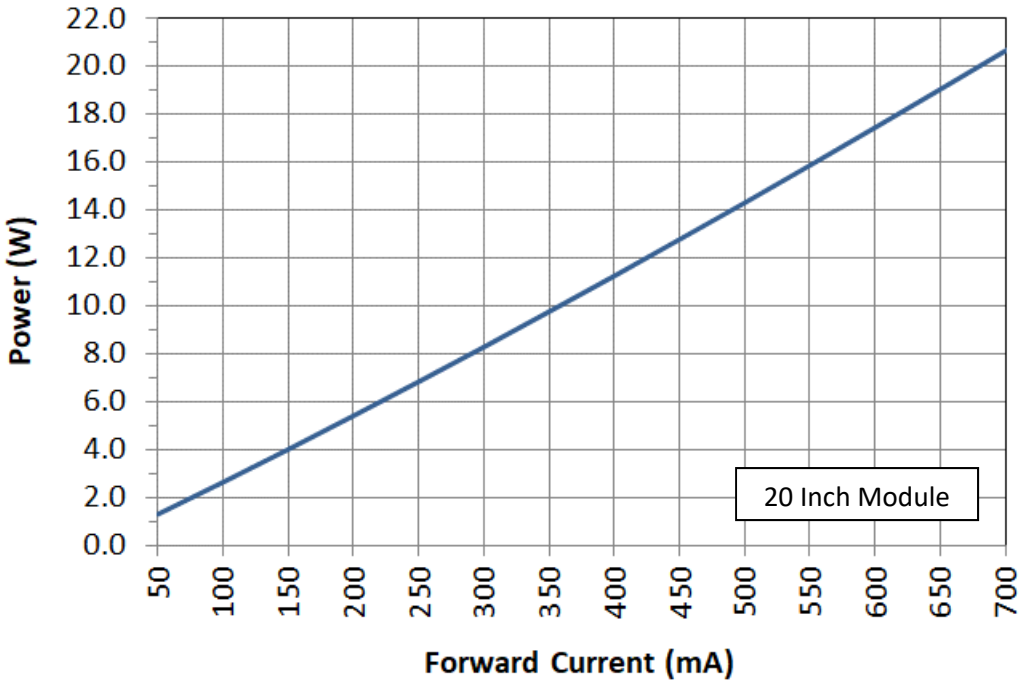
22.0
20.0
18.0
16.0
14.0
12.0
10.0
8.0
6.0
4.0
2.0
0.0
Power (W)
20 Inch Module
50
100
150
200
250
300
350
400
450
500
550
600
650
700
Forward Current (mA)

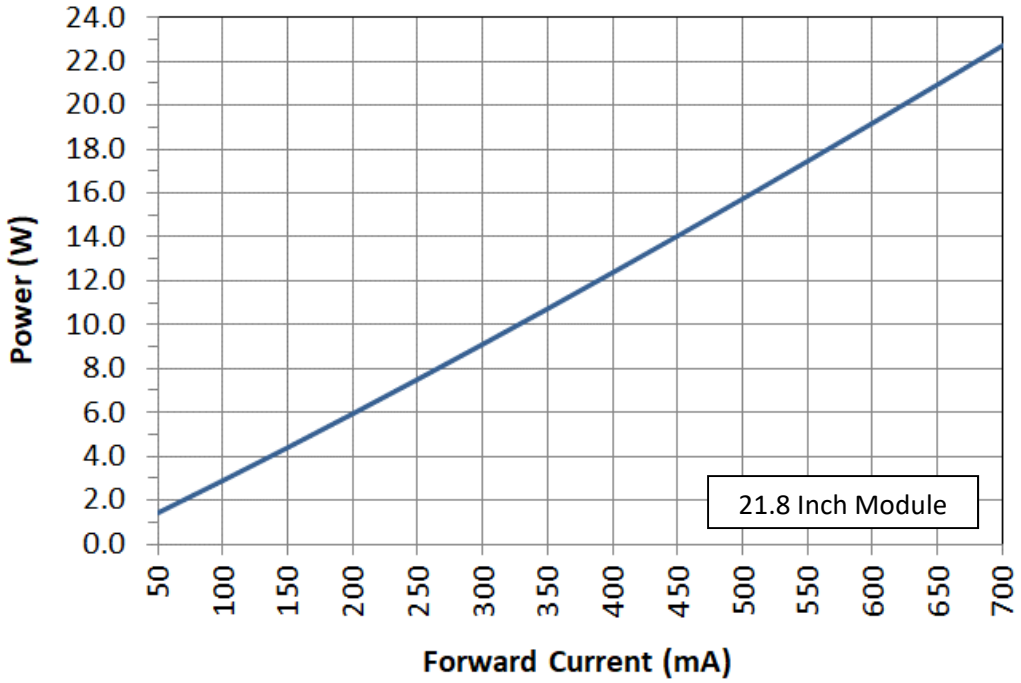
24.0
22.0
20.0
18.0
16.0
14.0
12.0
10.0
8.0
6.0
4.0
2.0
0.0
Power (W)
21.8 Inch Module
50
100
150
200
250
300
350
400
450
500
550
600
650
700
Forward Current (mA)

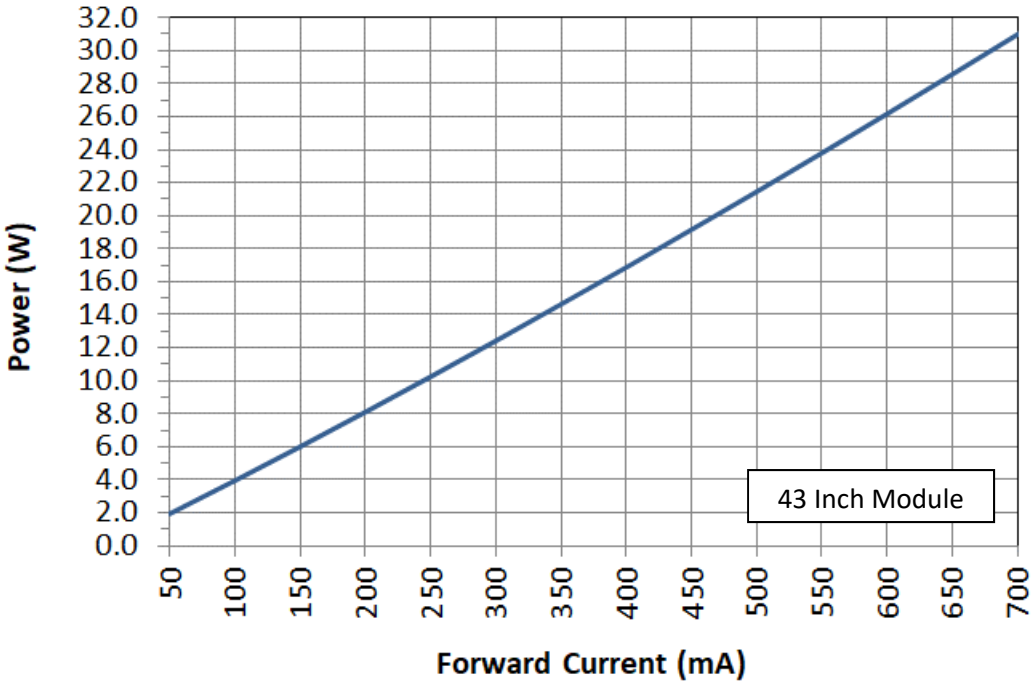
32.0
30.0
28.0
26.0
24.0
22.0
20.0
18.0
16.0
14.0
12.0
10.0
8.0
6.0
4.0
2.0
0.0
Power (W)
43 Inch Module
50
100
150
200
250
300
350
400
450
500
550
600
650
700
Forward Current (mA)

Temperature Ratings

Description	Case Temperature[1]
Maximum operating temperature	65°C
Minimum operating temperature	-20°C
Maximum storage temperature	80°C
Minimum storage temperature	-20°C

Notes:

1. Case temperature is defined as the temperature measured at the T_c point next to the connector as marked on the printed circuit board. To measure the case temperature, mount a thermocouple to the T_c point as is indicated on the product drawing contained in this data sheet.

Lumen Maintenance

Intematix Ambient Lighting Modules are predicted to deliver on average ≥ 70% lumen maintenance after 50,000 hours of operation when driven at their rated typical forward current with a case temperature measurement point (T_c) maintained at or below 60°C. Intematix is in the process of conducting LM80 testing on these modules to provide further guidance. Please consult your Intematix sales representative for further information.

Mechanical Characteristics – 9.5 Inch Module

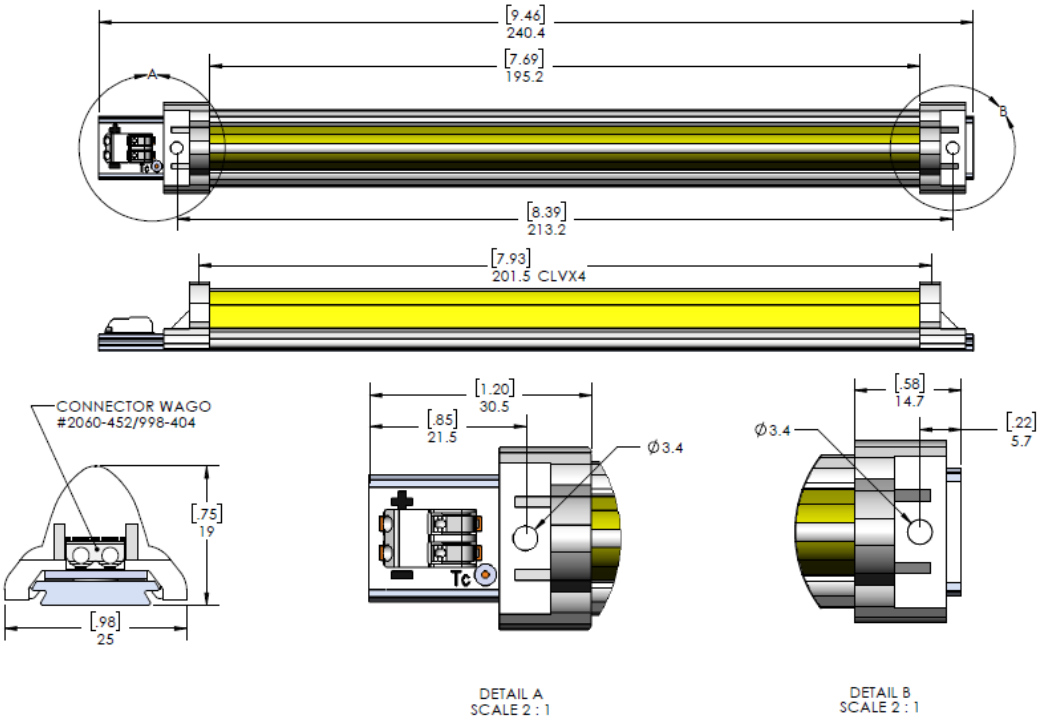

Notes:

1. Drawings are not to scale.
2. Drawing dimensions are in millimeters.
3. Mount using 2x M3 screws at the ends of the module.
4. On board connector is a Wago terminal block that accepts 18-24 AWG or 0.2 – 0.75 mm^2 solid or fine stranded wire with a strip length of 7-9mm.

Mechanical Characteristics – 12 Inch Module

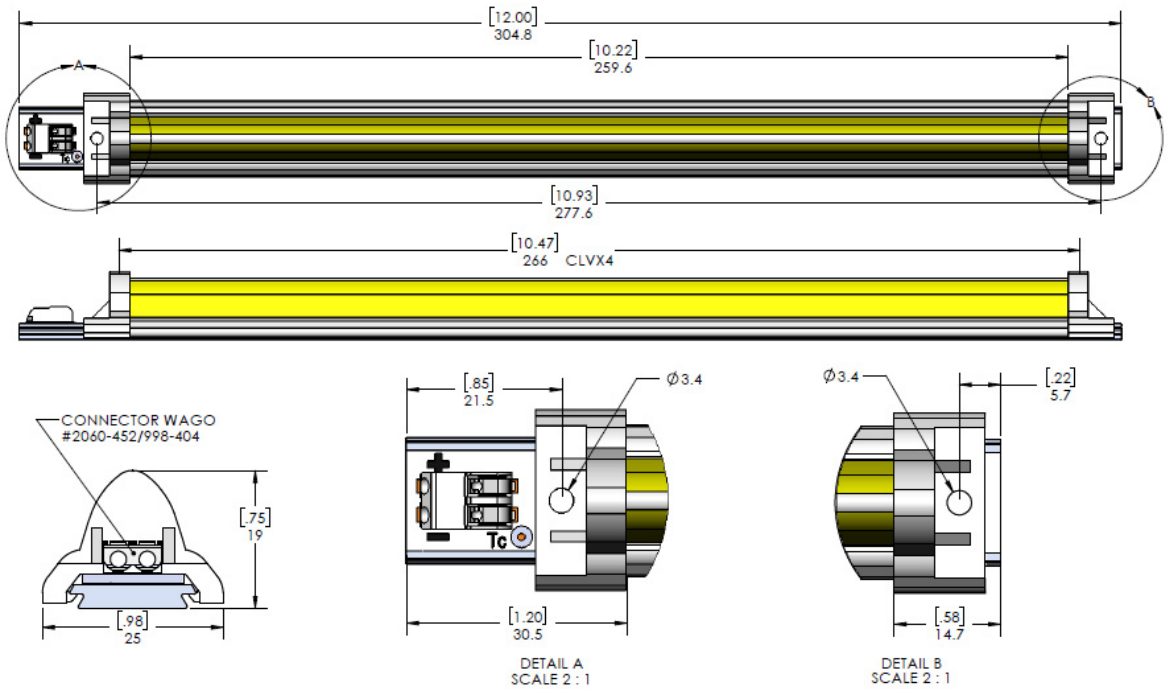

Notes:

1. Drawings are not to scale.
2. Drawing dimensions are in millimeters.
3. Mount using 2x M3 screws at the ends of the module.
4. On board connector is a Wago terminal block that accepts 18-24 AWG or 0.2 – 0.75 mm^2 solid or fine stranded wire with a strip length of 7-9mm.

Mechanical Characteristics – 20 Inch Module

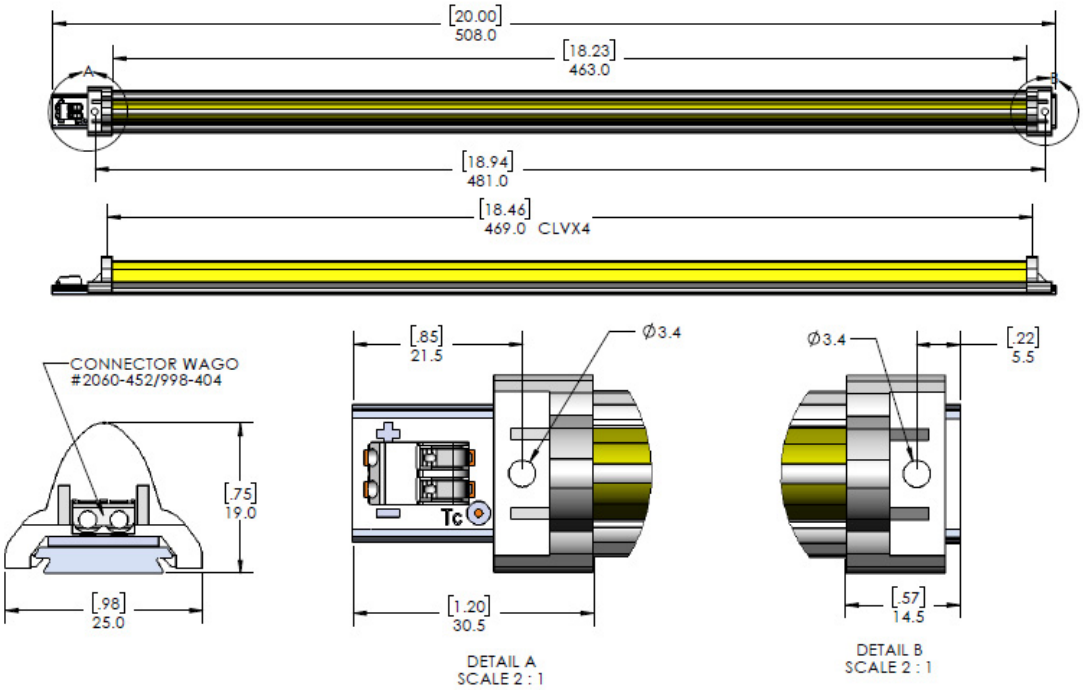

Notes:

1. Drawings are not to scale.
2. Drawing dimensions are in millimeters.
3. Mount using 2x M3 screws at the ends of the module.
4. On board connector is a Wago terminal block that accepts 18-24 AWG or 0.2 – 0.75 mm^2 solid or fine stranded wire with a strip length of 7-9mm.

Mechanical Characteristics – 21.8 Inch Module

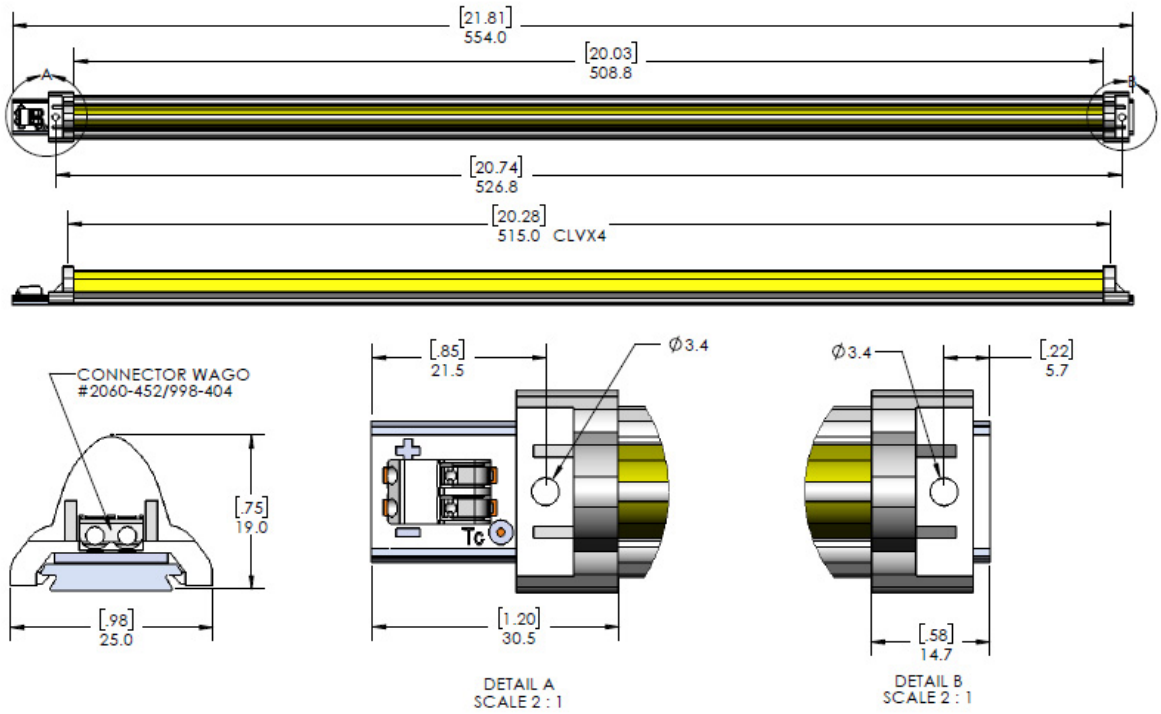

Notes:

1. Drawings are not to scale.
2. Drawing dimensions are in millimeters.
3. Mount using 2x M3 screws at the ends of the module.
4. On board connector is a Wago terminal block that accepts 18-24 AWG or 0.2 - 0.75 mm^2 solid or fine stranded wire with a strip length of 7-9mm.

Mechanical Characteristics – 43 Inch Module

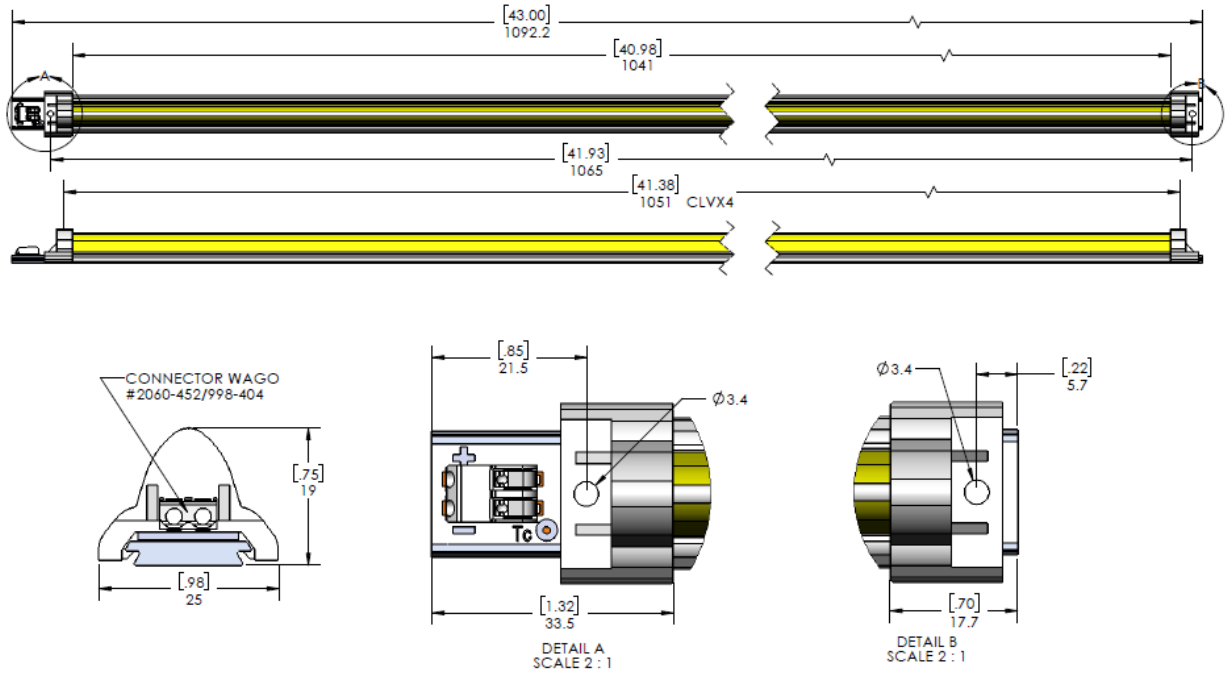

Notes:

1. Drawings are not to scale
2. Drawing dimensions are in millimeters.
3. Mount using 2x M3 screws at the ends of the module. If additional support is needed in the center of the module clear clips can be used to secure the module to the luminaire.
4. On board connector is a Wago terminal block that accepts 18-24 AWG or 0.2 – 0.75 mm^2 solid or fine stranded wire with a strip length of 7-9mm.

Regulatory Compliance

Description	Compliance
CE	IEC 62031 Class III
UL	8750 Recognized Class 2, suitable for dry and damp locations
CSA	C22.2 No. 250 13-14
Eye Safety	Tested in accordance with IEC TR 62778 For blue light these modules are rated Risk Group 0 (Exempt) at the specified maximum drive current
RoHS	RoHS Compliant
REACH	REACH Compliant

Product Marking

Modules are laser marked on the back of the aluminum as follows:

Where:

P/N Is the Intematix part number for the module

AX Is an internal code used by Intematix

D/C Is the date code in YYWW format for the production of the modules

L/N Is the internal work order number used for traceability, note that the –X letter code after the lot number (-C in this example) can be used for matching LED modules to reduce current hogging if two or modules will be connected to a single driver in parallel

E336471 is the Intematix UL File number associated with these modules

Packaging and Labeling

Intematix modules are packed in trays. The trays are sealed in a bag which is then placed in a box. The box is then labeled using the following format:

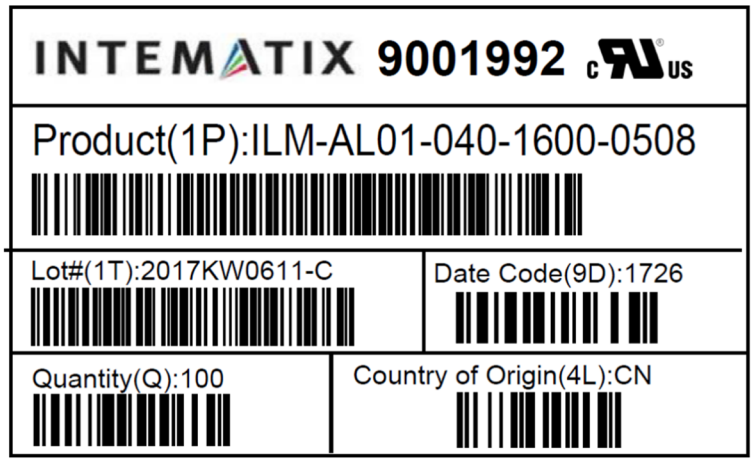

Only one product (part number) is contained per box. In the event that more than one lot number is included in a single box a label will be applied for each lot number stating the number of products included from that specific lot within the box.

Product	Value	Tray	Box
9.5 Inch Modules	Quantity	20	200
	Dimension	45 cm X 57 cm X 2.5 cm	47 cm X 59 cm X 27 cm
12 Inch Modules	Quantity	10	100
	Dimension	40 cm X 36 cm X 2.5 cm	42 cm X 38 cm X 27 cm
20 Inch Modules	Quantity	10	100
	Dimension	40 cm X 56 cm X 2.5 cm	42 cm X 58 cm X 27 cm
21.8 Inch Modules	Quantity	10	100
	Dimension	45 cm X 62 cm X 2.5 cm	47 cm X 64 cm X 27 cm
43 Inch Modules	Quantity	10	50
	Dimension	40 cm X 115 cm X 2.5 cm	42 cm X 117 cm X 15 cm

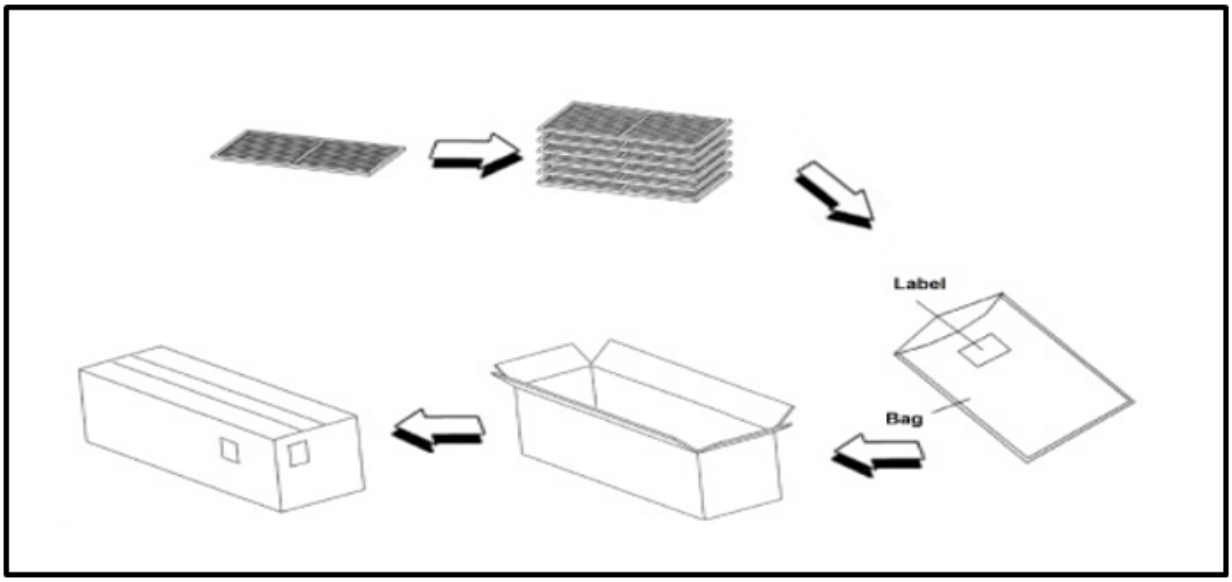

Handling Considerations

If parts require cleaning, use a lint free tissue, isopropanol (IPA), or a mild detergent. Dry using compressed clean dry air (CDA).

Company Information

Intematix products enable attractive lighting system designs, vivid color quality, and superior consistency, uniformity, and reliability. By providing customized and patented phosphors, phosphor components and modules, Intematix products serve as the foundation for lighting solutions serving markets including general and specialty lighting, displays, and automotive. As a materials innovator, the integration of our broad selection of phosphors into components and modules also accelerates time-to-market and reduces system costs. To learn more about the company please visit www.intematix.com.

46410 Fremont Boulevard
Fremont, CA 94538
Tel: +1 (510) 933-3300
Fax: +1 (510) 668-0793
sales@intematix.com

©2018 Intematix, Inc. All rights reserved. Product specifications are subject to change without notice.
Last updated March 1st, 2018